ESERCIZI DIODI - PROPOSTI

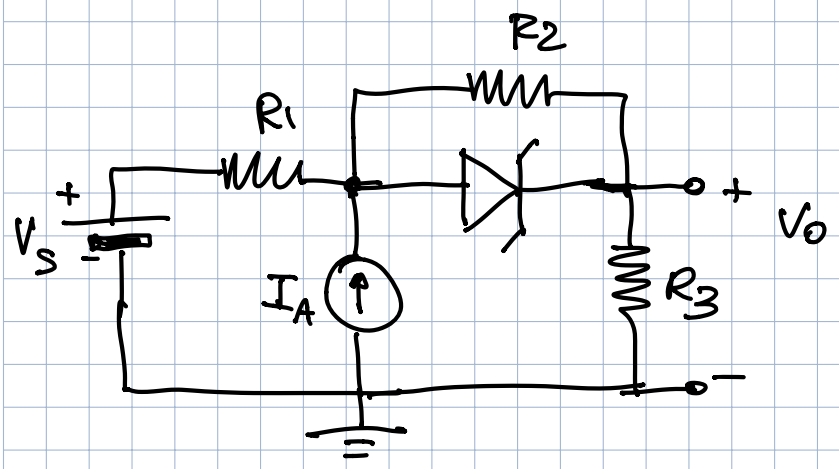

$R_1 = 1\,K\Omega$ $\quad I_A = 10\,mA$

$R_2 = 2\,K\Omega$ $\quad D_Z$: $V_{ON} = 1V$, $R_{ON} = 0\,\Omega$, $V_Z = 10V$, $R_Z = 0\,\Omega$

$R_3 = 3\,K\Omega$

trovare $V_o = f(V_s)$

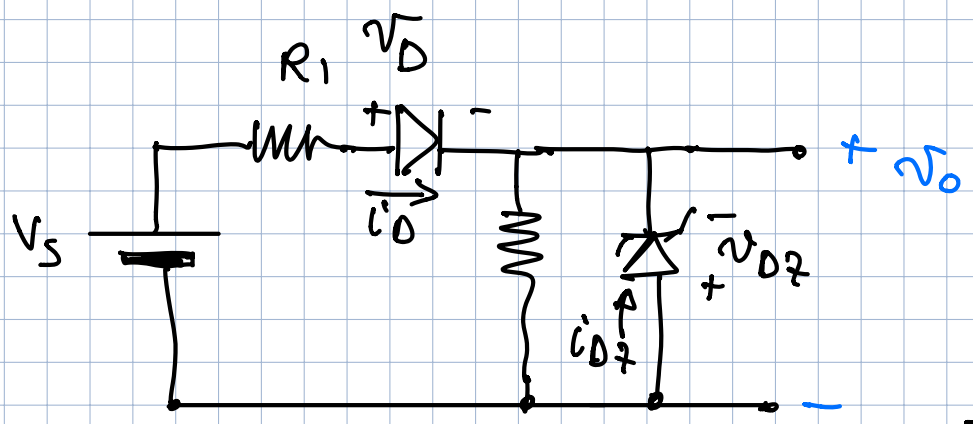

$R_1 = 1\,K\Omega$

$R_2 = 3\,K\Omega$

$V_{ON} = 1V$

$V_Z = 7.5\,V$

TROVARE $v_o = f(V_s)$

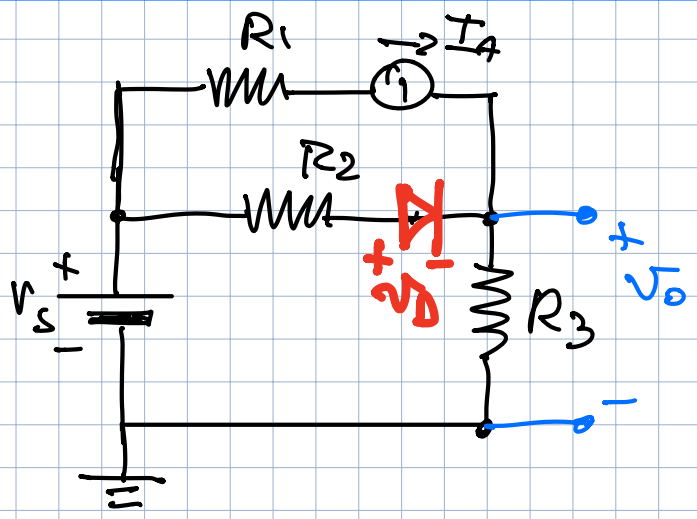

$R_1 = 5\,K\Omega$ $\quad V_{ON} = 1V$

$R_2 = 6\,K\Omega$

$R_3 = 2\,K\Omega$

$I_A = 2\,mA$

TROVARE

1) $v_o = f(V_s)$

2) con $V_s = 2V$ trovare $v_o = f(I_A)$